METRO AREENA, competition hall

Direction of movement in ← out ←

1st. Floor (Ground level)

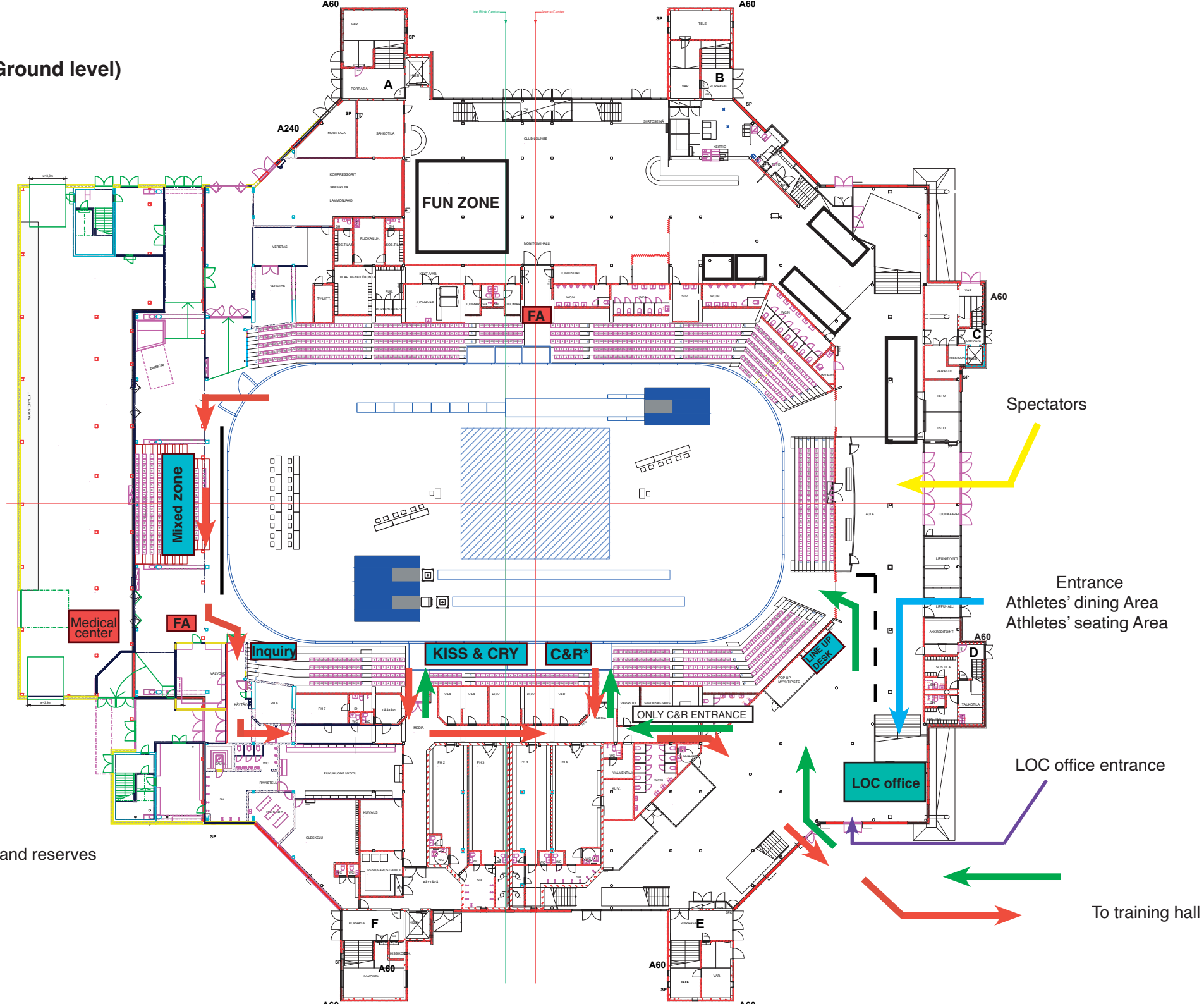

* C&R = Coaches and reserves

2nd. Floor

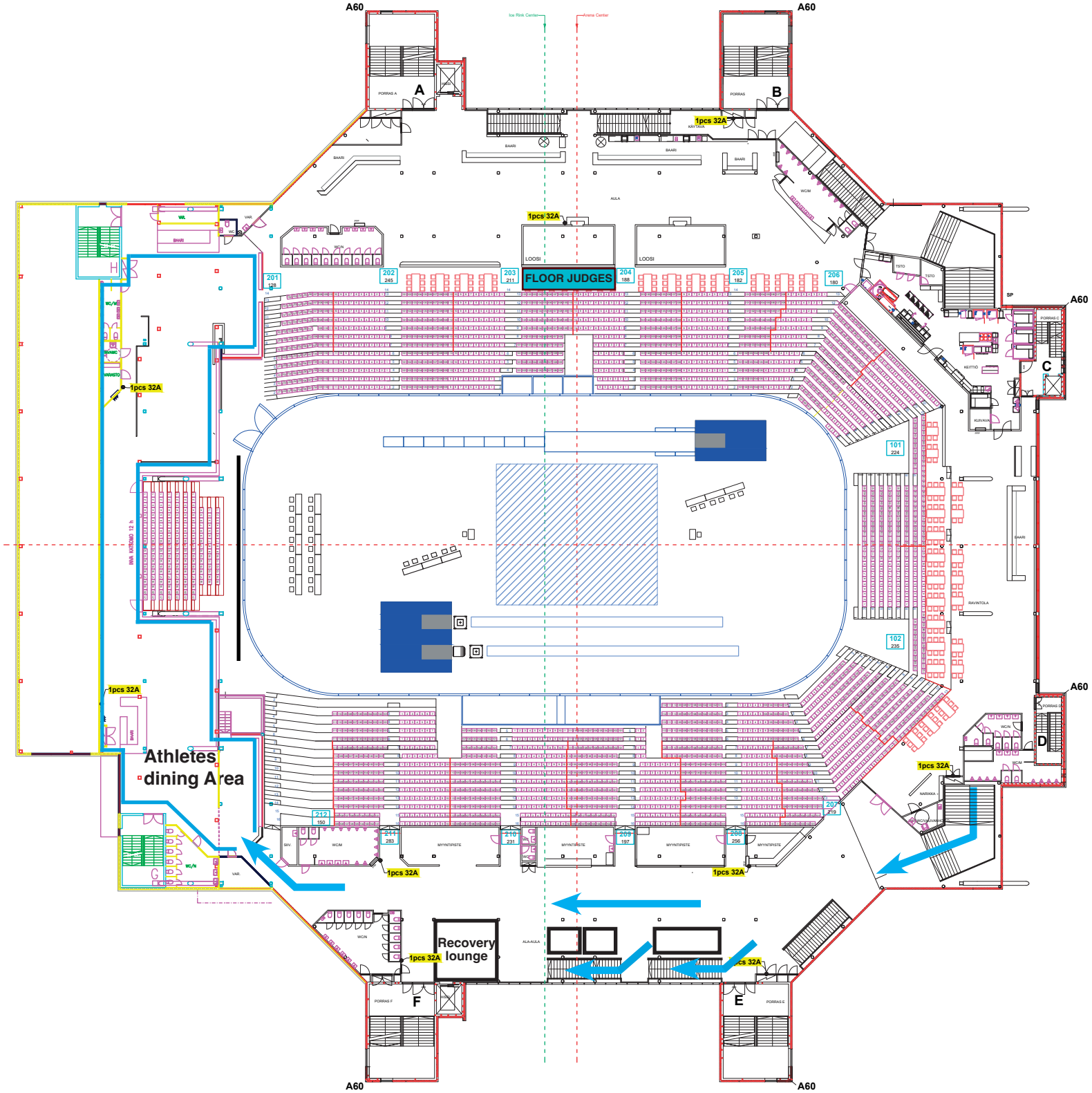

A60
A
B
C
D
E
F
1pcs 32A
FLOOR JUDGES
Athletes dining Area
Recovery lounge

4th. Floor

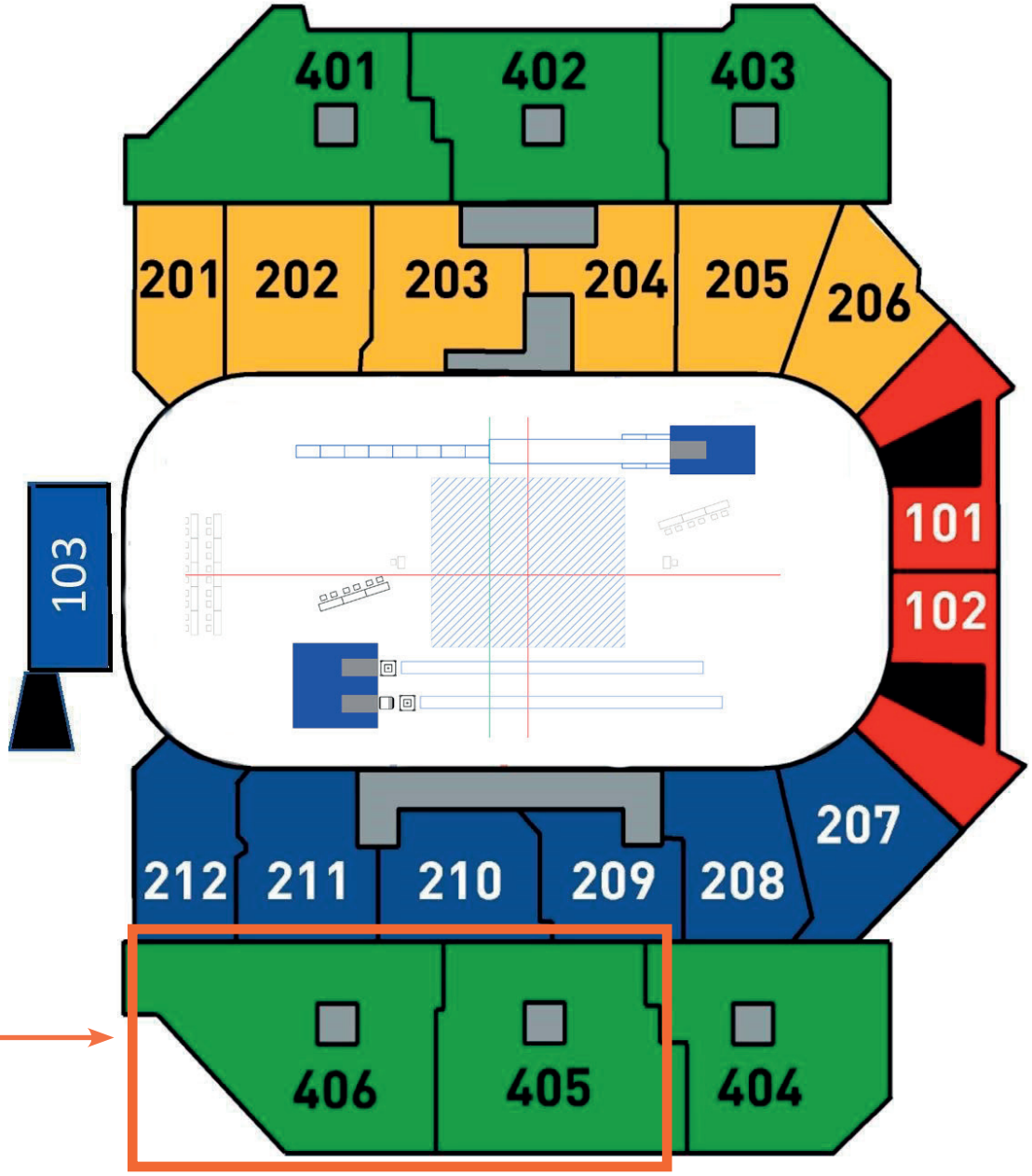

Athletes' seating area

HONKAHALLI, training hall

Direction of movement in ← out ←

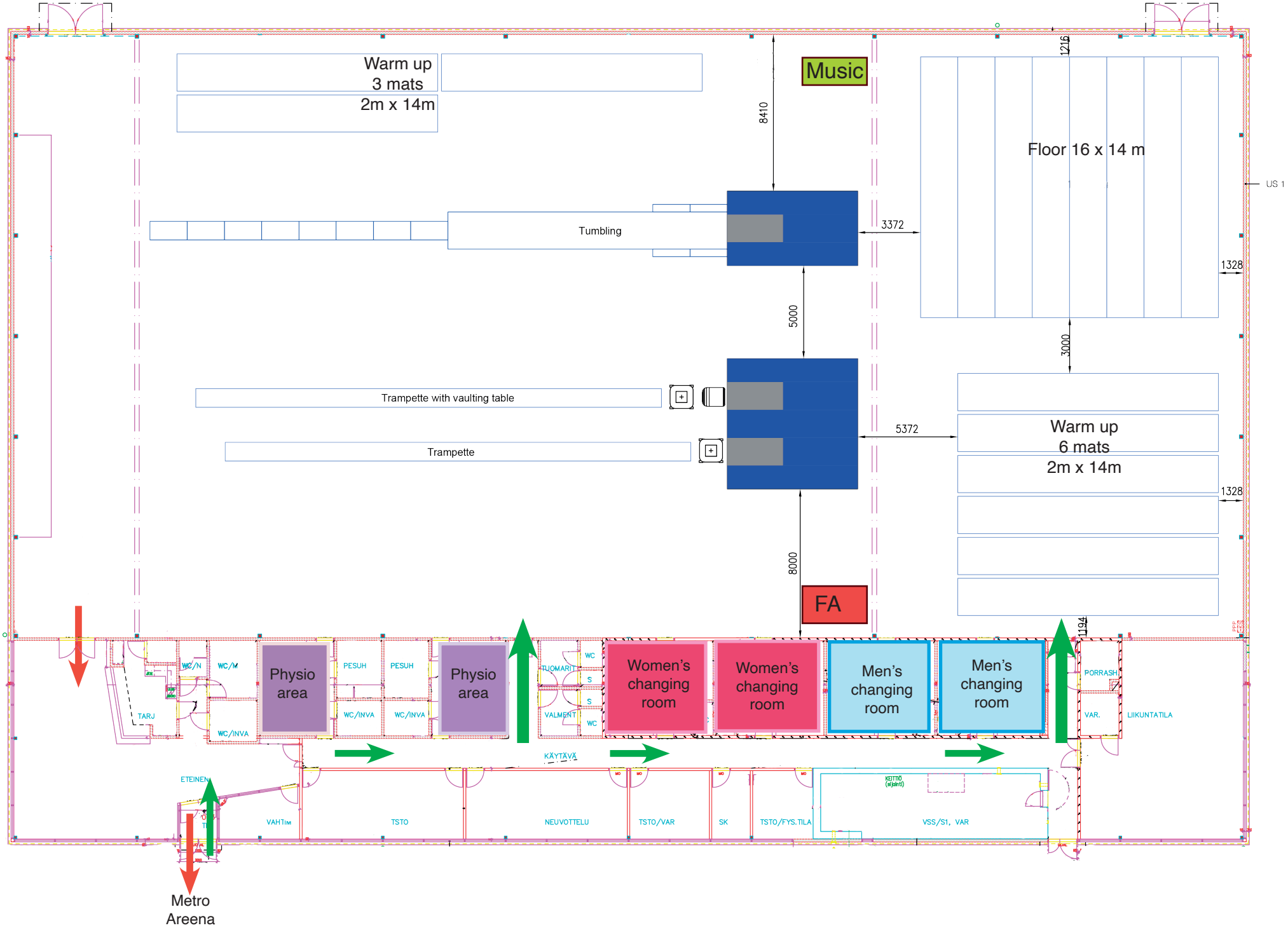
Warm up
3 mats
2m x 14m
Music
8410
Floor 16 x 14 m
1216
US 1
Tumbling
3372
1328
5000
3000
Trampette with vaulting table
Trampette
5372
Warm up
6 mats
2m x 14m
1328
8000
FA
1194
Physio area
Physio area
Women's changing room
Women's changing room
Men's changing room
Men's changing room
PESUH
PESUH
WC/INVA
WC/INVA
WC/INVA
WC/N
WC/M
TARJ
TUOMARIT
VALMENT
WC
S
S
WC
PORRASH
VAR.
LIIKUNTATILA
KÄYTÄVÄ
ETEINEN
VAHTIM
TSTO
NEUVOTTELU
TSTO/VAR
SK
TSTO/FYS.TILA
KEITTIÖ (sijainti)
VSS/S1, VAR
Metro
Areena

Draw for Starting order

Junior Men's Qualification

AZE - DEN - GBR - ISL - NOR - SWE
6

Floor	Tumble	Trampet
SWE	GBR	NOR
AZE	ISL	DEN
	SWE	GBR
NOR	AZE	ISL
DEN		SWE
GBR	NOR	AZE
ISL	DEN	

Junior Mixed Qualification

CZE - DEN - GBR - ISL - NOR - SWE
6

Floor	Tumble	Trampet
CZE	DEN	ISL
GBR	NOR	SWE
	CZE	DEN
ISL	GBR	NOR
SWE		CZE
DEN	ISL	GBR
NOR	SWE	

Junior Women's Qualification

AUT - CZE - FIN - FRA - GER - GBR -
ISL - ITA - LUX - NOR - POR - SWE

Floor	Tumble	Trampet
GBR	POR	AUT
FIN	GER	
	GBR	POR
AUT	FIN	GER
		GBR
POR	AUT	FIN
GER		ISL
LUX	SWE	NOR
CZE	ITA	FRA
ISL	LUX	SWE
NOR	CZE	ITA
FRA	ISL	LUX
SWE	NOR	CZE
ITA	FRA	

The draw took place online on 14th of July 2026

Draw for Starting order

Senior Mixed Qualification

CZE - DEN - FIN - FRA - GBR - ISL - ITA - NED - NOR - POR - SWE

11

Floor	Tumble	Trampet
NED	ISL	GBR
ITA	SWE	
	NED	ISL
GBR	ITA	SWE
		NED
ISL	GBR	ITA
SWE		CZE
FIN	GER	DEN
NOR	FRA	
CZE	FIN	GER
DEN	NOR	FRA
	CZE	FIN
GER	DEN	NOR
FRA		

Senior Women's Qualification

AUT - DEN - FIN - GBR - ISL - LUX - NOR - POR -SWE

9

Floor	Tumble	Trampet
AUT	GBR	LUX
DEN	SWE	FIN
NOR	ISL	POR
	AUT	GBR
LUX	DEN	SWE
FIN	NOR	ISL
POR		AUT
GBR	LUX	DEN
SWE	FIN	NOR
ISL	POR	

Senior Men's Qualification

DEN - EST - GBR - NOR - POR - SWE

6

Floor	Tumble	Trampet
GBR	EST	SWE
NOR	POR	DEN
	GBR	EST
SWE	NOR	POR
DEN		GBR
EST	SWE	NOR
POR	DEN	

The draw took place online on 14th of July 2026

Draw for Starting order

Finals

except Junior Women's

Q1 - Q2 - Q3 - Q4 - Q5 - Q6

Q6	Q4	Q5
Q1	Q3	Q2
	Q6	Q4
Q5	Q1	Q3
Q2		Q6
Q4	Q5	Q1
Q3	Q2	

Junior Women's Final

Q1 - Q2 - Q3 - Q4 - Q5 - Q6 - Q7 - Q8

Q5	Q7	Q6
Q8	Q2	Q3
Q4	Q1	
	Q5	Q7
Q6	Q8	Q2
Q3	Q4	Q1
		Q5
Q7	Q6	Q8
Q2	Q3	Q4
Q1		

The draw took place online on 11th of August 2026

TEAMGYM 2026
16TH EUROPEAN CHAMPIONSHIPS ESPOO, FINLAND

16th European TeamGym Championships
Juniors & Seniors, Espoo (FIN)
October 14th to 17th, 2026

EUROPEAN CHAMPIONSHIPS

Updated 04.10.2026

EQUIPMENT SET UP FORM FOR TUMBLE & TRAMPET
Appendix 3

This form must be given at the accreditation

National Federation			
Category	☐ Juniors	☐ Seniors	
Section	☐ Women	☐ Mixed	☐ Men
Competition	☐ Qualification	☐ Final	

Details for Equipment set up - Trampet				
Trampet selection	☐ Dorado- 32	☐ Dorado-36	☐ Dorado- 40	
Height of back part	☐ 65 cm	☐ 70 cm	☐ 75 cm	☐ 80 cm
Vaulting table height from 145-165 cm	cm	☐ A) Bumper fixed against the trampet legs ☐ B) Bumper on the landing mat		
Vault – trampet Distance (3-38 cm)*	cm	Additional safety mat	☐ Yes	☐ No

Details for Equipment set up - Tumble		
Additional safety mat	☐ Yes	☐ No

Full name:	
Place & Date:	
Signature:	

*** Distance adjustment options between trampet and vaulting table: 3cm, 8cm, 13cm, 18cm, 23cm, 28cm, 33cm and 38cm**

EBU
OPERATING EUROVISION AND EURORADIO

SMARTSCORING

It is possible to adjust the trampet with a built-in mechanism (telescopic arms).
The distance is adjusted in increments of 5 cm. Starting point (minimum distance) is 65 cm with the high part towards the landing mat. The tallest distance is 80 cm.

The distance between the Pegasus and trampet is adjusted with a built-in mechanism in increments of 5 cm. The minimum distance is 3 cm and maximum 38 cm.

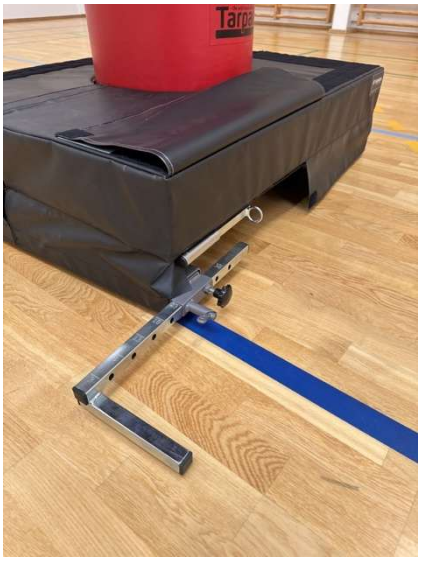

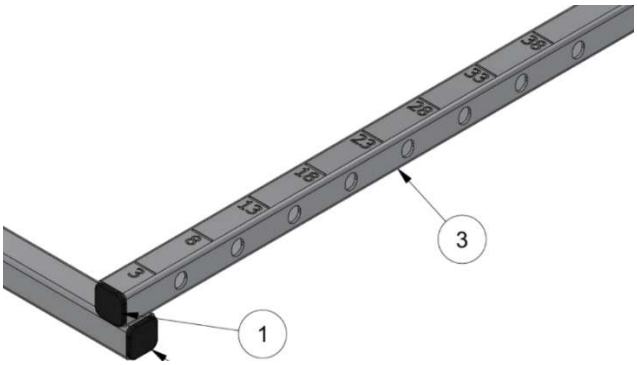

A

B

Training schedules

Tuesday, October 13th, 2026						
	Warm-up		Training hall		Competition hall	
	Start	End	Start	End	Start	End
Training Junior Men's Teams	10:00	10:40	10:35	12:15	10:55	12:35
Training Junior Mixed Teams	11:40	12:20	12:15	13:55	12:35	14:15
Training Junior Women's Teams	13:35	14:35	14:10	16:10	14:30	16:30

Wednesday, October 14th, 2026						
	Warm-up		Training hall		Competition hall	
	Start	End	Start	End	Start	End
Training Senior Mixed Teams	08:30	09:30	09:05	11:05	09:25	11:25
Training Senior Women's Teams	10:30	11:20	11:05	12:55	11:25	13:15
Training Senior Men's Teams	12:20	13:00	12:55	14:35	13:15	14:55

TEAMGYM 2026
16TH EUROPEAN CHAMPIONSHIPS
ESPOO, FINLAND

European Gymnastics

Training for Junior Men's Teams

Tuesday
October 13th, 2026

General warm-up start	**10:00**
Apparatus warm-up start	**10:35**
Training in competition hall start	**10:55**
End of training	**12:35**

				General warm-up		Apparatus warm-up						Competition hall					
						Floor		Tumble		Trampet		Floor		Tumble		Trampet	
#	Section	Team	Rnd	Start	End	Start	End	Start	End	Start	End	Start	End	Start	End	Start	End
1	JUNIOR MEN	SWE	1	10:00	10:30	10:35	10:45					10:55	11:05				
2	JUNIOR MEN	GBR	1	10:00	10:30			10:35	10:45					10:55	11:05		
3	JUNIOR MEN	NOR	1	10:00	10:30					10:35	10:45					10:55	11:05
4	JUNIOR MEN	AZE	1	10:10	10:40	10:45	10:55					11:05	11:15				
5	JUNIOR MEN	ISL	1	10:10	10:40			10:45	10:55					11:05	11:15		
6	JUNIOR MEN	DEN	1	10:10	10:40					10:45	10:55					11:05	11:15
7	JUNIOR MEN	SWE	2					11:15	11:25					11:35	11:45		
8	JUNIOR MEN	GBR	2							11:15	11:25					11:35	11:45
9	JUNIOR MEN	NOR	2			11:15	11:25					11:35	11:45				
10	JUNIOR MEN	AZE	2					11:25	11:35					11:45	11:55		
11	JUNIOR MEN	ISL	2							11:25	11:35					11:45	11:55
12	JUNIOR MEN	DEN	2			11:25	11:35					11:45	11:55				
13	JUNIOR MEN	SWE	3							11:55	12:05					12:15	12:25
14	JUNIOR MEN	GBR	3			11:55	12:05					12:15	12:25				
15	JUNIOR MEN	NOR	3					11:55	12:05					12:15	12:25		
16	JUNIOR MEN	AZE	3							12:05	12:15					12:25	12:35
17	JUNIOR MEN	ISL	3			12:05	12:15					12:25	12:35				
18	JUNIOR MEN	DEN	3					12:05	12:15					12:25	12:35		

TEAMGYM 2026
16TH EUROPEAN CHAMPIONSHIPS
ESPOO, FINLAND

European Gymnastics

Training for Junior Mixed Teams

Tuesday
October 13th, 2026

General warm-up start	**11:40**
Apparatus warm-up start	**12:15**
Training in competition hall start	**12:35**
End of training	**14:15**

				General warm-up		Apparatus warm-up						Competition hall					
						Floor		Tumble		Trampet		Floor		Tumble		Trampet	
#	Section	Team	Rnd	Start	End	Start	End	Start	End	Start	End	Start	End	Start	End	Start	End
1	JUNIOR MIXED	CZE	1	11:40	12:10	12:15	12:25					12:35	12:45				
2	JUNIOR MIXED	DEN	1	11:40	12:10			12:15	12:25					12:35	12:45		
3	JUNIOR MIXED	ISL	1	11:40	12:10					12:15	12:25					12:35	12:45
4	JUNIOR MIXED	GBR	1	11:50	12:20	12:25	12:35					12:45	12:55				
5	JUNIOR MIXED	NOR	1	11:50	12:20			12:25	12:35					12:45	12:55		
6	JUNIOR MIXED	SWE	1	11:50	12:20					12:25	12:35					12:45	12:55
7	JUNIOR MIXED	CZE	2					12:55	13:05					13:15	13:25		
8	JUNIOR MIXED	DEN	2							12:55	13:05					13:15	13:25
9	JUNIOR MIXED	ISL	2			12:55	13:05					13:15	13:25				
10	JUNIOR MIXED	GBR	2					13:05	13:15					13:25	13:35		
11	JUNIOR MIXED	NOR	2							13:05	13:15					13:25	13:35
12	JUNIOR MIXED	SWE	2			13:05	13:15					13:25	13:35				
13	JUNIOR MIXED	CZE	3							13:35	13:45					13:55	14:05
14	JUNIOR MIXED	DEN	3			13:35	13:45					13:55	14:05				
15	JUNIOR MIXED	ISL	3					13:35	13:45					13:55	14:05		
16	JUNIOR MIXED	GBR	3							13:45	13:55					14:05	14:15
17	JUNIOR MIXED	NOR	3			13:45	13:55					14:05	14:15				
18	JUNIOR MIXED	SWE	3					13:45	13:55					14:05	14:15		

Training for Junior Women's Teams

Tuesday	**General warm-up start**	**13:35**
October 13th, 2026	**Apparatus warm-up start**	**14:10**
	Training in competition hall start	**14:30**
	End of training	**16:30**

				General warm-up		Apparatus warm-up						Competition hall					
						Floor		Tumble		Trampet		Floor		Tumble		Trampet	
#	Section	Team	Rnd	Start	End	Start	End	Start	End	Start	End	Start	End	Start	End	Start	End
1	JUNIOR WOMEN	GBR	1	13:35	14:05	14:10	14:20					14:30	14:40				
2	JUNIOR WOMEN	POR	1	13:35	14:05			14:10	14:20					14:30	14:40		
3	JUNIOR WOMEN	AUT	1	13:35	14:05					14:10	14:20					14:30	14:40
4	JUNIOR WOMEN	FIN	1	13:45	14:15	14:20	14:30					14:40	14:50				
5	JUNIOR WOMEN	GER	1	13:45	14:15			14:20	14:30					14:40	14:50		
6	JUNIOR WOMEN	ISL	1	13:45	14:15					14:20	14:30					14:40	14:50
7	JUNIOR WOMEN	LUX	1	13:55	14:25	14:30	14:40					14:50	15:00				
8	JUNIOR WOMEN	SWE	1	13:55	14:25			14:30	14:40					14:50	15:00		
9	JUNIOR WOMEN	NOR	1	13:55	14:25					14:30	14:40					14:50	15:00
10	JUNIOR WOMEN	CZE	1	14:05	14:35	14:40	14:50					15:00	15:10				
11	JUNIOR WOMEN	ITA	1	14:05	14:35			14:40	14:50					15:00	15:10		
12	JUNIOR WOMEN	FRA	1	14:05	14:35					14:40	14:50					15:00	15:10
13	JUNIOR WOMEN	GBR	2					14:50	15:00					15:10	15:20		
14	JUNIOR WOMEN	POR	2							14:50	15:00					15:10	15:20
15	JUNIOR WOMEN	AUT	2			14:50	15:00					15:10	15:20				
16	JUNIOR WOMEN	FIN	2					15:00	15:10					15:20	15:30		
17	JUNIOR WOMEN	GER	2							15:00	15:10					15:20	15:30
18	JUNIOR WOMEN	ISL	2			15:00	15:10					15:20	15:30				
19	JUNIOR WOMEN	LUX	2					15:10	15:20					15:30	15:40		
20	JUNIOR WOMEN	SWE	2							15:10	15:20					15:30	15:40
21	JUNIOR WOMEN	NOR	2			15:10	15:20					15:30	15:40				
22	JUNIOR WOMEN	CZE	2					15:20	15:30					15:40	15:50		
23	JUNIOR WOMEN	ITA	2							15:20	15:30					15:40	15:50
24	JUNIOR WOMEN	FRA	2			15:20	15:30					15:40	15:50				
25	JUNIOR WOMEN	GBR	3							15:30	15:40					15:50	16:00
26	JUNIOR WOMEN	POR	3			15:30	15:40					15:50	16:00				
27	JUNIOR WOMEN	AUT	3					15:30	15:40					15:50	16:00		
28	JUNIOR WOMEN	FIN	3							15:40	15:50					16:00	16:10
29	JUNIOR WOMEN	GER	3			15:40	15:50					16:00	16:10				
30	JUNIOR WOMEN	ISL	3					15:40	15:50					16:00	16:10		
31	JUNIOR WOMEN	LUX	3							15:50	16:00					16:10	16:20
32	JUNIOR WOMEN	SWE	3			15:50	16:00					16:10	16:20				
33	JUNIOR WOMEN	NOR	3					15:50	16:00					16:10	16:20		
34	JUNIOR WOMEN	CZE	3							16:00	16:10					16:20	16:30
35	JUNIOR WOMEN	ITA	3			16:00	16:10					16:20	16:30				
36	JUNIOR WOMEN	FRA	3					16:00	16:10					16:20	16:30		

Training for Senior Mixed Teams

Wednesday
October 14th, 2026

General warm-up start	**08:30**
Apparatus warm-up start	**09:05**
Training in competition hall start	**09:25**
End of training	**11:25**

				General warm-up		Apparatus warm-up						Competition hall					
						Floor		Tumble		Trampet		Floor		Tumble		Trampet	
#	Section	Team	Rnd	Start	End	Start	End	Start	End	Start	End	Start	End	Start	End	Start	End
1	SENIOR MIXED	NED	1	08:30	09:00	09:05	09:15					09:25	09:35				
2	SENIOR MIXED	ISL	1	08:30	09:00			09:05	09:15					09:25	09:35		
3	SENIOR MIXED	GBR	1	08:30	09:00					09:05	09:15					09:25	09:35
4	SENIOR MIXED	ITA	1	08:40	09:10	09:15	09:25					09:35	09:45				
5	SENIOR MIXED	SWE	1	08:40	09:10			09:15	09:25					09:35	09:45		
6	SENIOR MIXED	CZE	1	08:40	09:10					09:15	09:25					09:35	09:45
7	SENIOR MIXED	FIN	1	08:50	09:20	09:25	09:35					09:45	09:55				
8	SENIOR MIXED	GER	1	08:50	09:20			09:25	09:35					09:45	09:55		
9	SENIOR MIXED	DEN	1	08:50	09:20					09:25	09:35					09:45	09:55
10	SENIOR MIXED	NOR	1	09:00	09:30	09:35	09:45					09:55	10:05				
11	SENIOR MIXED	FRA	1	09:00	09:30			09:35	09:45					09:55	10:05		
12	SENIOR MIXED	NED	2					09:45	09:55					10:05	10:15		
13	SENIOR MIXED	ISL	2							09:45	09:55					10:05	10:15
14	SENIOR MIXED	GBR	2			09:45	09:55					10:05	10:15				
15	SENIOR MIXED	ITA	2					09:55	10:05					10:15	10:25		
16	SENIOR MIXED	SWE	2							09:55	10:05					10:15	10:25
17	SENIOR MIXED	CZE	2			09:55	10:05					10:15	10:25				
18	SENIOR MIXED	FIN	2					10:05	10:15					10:25	10:35		
19	SENIOR MIXED	GER	2							10:05	10:15					10:25	10:35
20	SENIOR MIXED	DEN	2			10:05	10:15					10:25	10:35				
21	SENIOR MIXED	NOR	2					10:15	10:25					10:35	10:45		
22	SENIOR MIXED	FRA	2							10:15	10:25					10:35	10:45
23	SENIOR MIXED	NED	3							10:25	10:35					10:45	10:55
24	SENIOR MIXED	ISL	3			10:25	10:35					10:45	10:55				
25	SENIOR MIXED	GBR	3					10:25	10:35					10:45	10:55		
26	SENIOR MIXED	ITA	3							10:35	10:45					10:55	11:05
27	SENIOR MIXED	SWE	3			10:35	10:45					10:55	11:05				
28	SENIOR MIXED	CZE	3					10:35	10:45					10:55	11:05		
29	SENIOR MIXED	FIN	3							10:45	10:55					11:05	11:15
30	SENIOR MIXED	GER	3			10:45	10:55					11:05	11:15				
31	SENIOR MIXED	DEN	3					10:45	10:55					11:05	11:15		
32	SENIOR MIXED	NOR	3							10:55	11:05					11:15	11:25
33	SENIOR MIXED	FRA	3			10:55	11:05					11:15	11:25				

Training for Senior Women Teams

Wednesday	**General warm-up start**	**10:30**
October 14th, 2026	**Apparatus warm-up start**	**11:05**
	Training in competition hall start	**11:25**
	End of training	**13:15**

				General warm-up		Apparatus warm-up						Competition hall					
						Floor		Tumble		Trampet		Floor		Tumble		Trampet	
#	Section	Team	Rnd	Start	End	Start	End	Start	End	Start	End	Start	End	Start	End	Start	End
1	SENIOR WOMEN	AUT	1	10:30	11:00	11:05	11:15					11:25	11:35				
2	SENIOR WOMEN	GBR	1	10:30	11:00			11:05	11:15					11:25	11:35		
3	SENIOR WOMEN	LUX	1	10:30	11:00					11:05	11:15					11:25	11:35
4	SENIOR WOMEN	DEN	1	10:40	11:10	11:15	11:25					11:35	11:45				
5	SENIOR WOMEN	SWE	1	10:40	11:10			11:15	11:25					11:35	11:45		
6	SENIOR WOMEN	FIN	1	10:40	11:10					11:15	11:25					11:35	11:45
7	SENIOR WOMEN	NOR	1	10:50	11:20	11:25	11:35					11:45	11:55				
8	SENIOR WOMEN	ISL	1	10:50	11:20			11:25	11:35					11:45	11:55		
9	SENIOR WOMEN	POR	1	10:50	11:20					11:25	11:35					11:45	11:55
10	SENIOR WOMEN	AUT	2					11:45	11:55					12:05	12:15		
11	SENIOR WOMEN	GBR	2							11:45	11:55					12:05	12:15
12	SENIOR WOMEN	LUX	2			11:45	11:55					12:05	12:15				
13	SENIOR WOMEN	DEN	2					11:55	12:05					12:15	12:25		
14	SENIOR WOMEN	SWE	2							11:55	12:05					12:15	12:25
15	SENIOR WOMEN	FIN	2			11:55	12:05					12:15	12:25				
16	SENIOR WOMEN	NOR	2					12:05	12:15					12:25	12:35		
17	SENIOR WOMEN	ISL	2							12:05	12:15					12:25	12:35
18	SENIOR WOMEN	POR	2			12:05	12:15					12:25	12:35				
19	SENIOR WOMEN	AUT	3							12:25	12:35					12:45	12:55
20	SENIOR WOMEN	GBR	3			12:25	12:35					12:45	12:55				
21	SENIOR WOMEN	LUX	3					12:25	12:35					12:45	12:55		
22	SENIOR WOMEN	DEN	3							12:35	12:45					12:55	13:05
23	SENIOR WOMEN	SWE	3			12:35	12:45					12:55	13:05				
24	SENIOR WOMEN	FIN	3					12:35	12:45					12:55	13:05		
25	SENIOR WOMEN	NOR	3							12:45	12:55					13:05	13:15
26	SENIOR WOMEN	ISL	3			12:45	12:55					13:05	13:15				
27	SENIOR WOMEN	POR	3					12:45	12:55					13:05	13:15		

TEAMGYM 2026
16TH EUROPEAN CHAMPIONSHIPS ESPOO, FINLAND

European Gymnastics

Training for Senior Men's Teams

Wednesday
October 14th, 2026

General warm-up start	**12:20**
Apparatus warm-up start	**12:55**
Training in competition hall start	**13:15**
End of training	**14:55**

				General warm-up		Apparatus warm-up						Competition hall					
						Floor		Tumble		Trampet		Floor		Tumble		Trampet	
#	Section	Team	Rnd	Start	End	Start	End	Start	End	Start	End	Start	End	Start	End	Start	End
1	SENIOR MEN	GBR	1	12:20	12:50	12:55	13:05					13:15	13:25				
2	SENIOR MEN	EST	1	12:20	12:50			12:55	13:05					13:15	13:25		
3	SENIOR MEN	SWE	1	12:20	12:50					12:55	13:05					13:15	13:25
4	SENIOR MEN	NOR	1	12:30	13:00	13:05	13:15					13:25	13:35				
5	SENIOR MEN	POR	1	12:30	13:00			13:05	13:15					13:25	13:35		
6	SENIOR MEN	DEN	1	12:30	13:00					13:05	13:15					13:25	13:35
7	SENIOR MEN	GBR	2					13:35	13:45					13:55	14:05		
8	SENIOR MEN	EST	2							13:35	13:45					13:55	14:05
9	SENIOR MEN	SWE	2			13:35	13:45					13:55	14:05				
10	SENIOR MEN	NOR	2					13:45	13:55					14:05	14:15		
11	SENIOR MEN	POR	2							13:45	13:55					14:05	14:15
12	SENIOR MEN	DEN	2			13:45	13:55					14:05	14:15				
13	SENIOR MEN	GBR	2							14:15	14:25					14:35	14:45
14	SENIOR MEN	EST	2			14:15	14:25					14:35	14:45				
15	SENIOR MEN	SWE	2					14:15	14:25					14:35	14:45		
16	SENIOR MEN	NOR	2							14:25	14:35					14:45	14:55
17	SENIOR MEN	POR	3			14:25	14:35					14:45	14:55				
18	SENIOR MEN	DEN	3					14:25	14:35					14:45	14:55		

TEAMGYM 2026
16TH EUROPEAN CHAMPIONSHIPS
ESPOO, FINLAND

European Gymnastics

Updated 07.10.2026

Competition schedules

Wednesday, October 14th, 2026						
	Warm-up		Training hall		Competition hall	
	Start	End	Start	End	Start	End
Opening Ceremony					15:15	15:45
Qualification Junior Men's Teams	15:07	15:57	15:42	17:12	16:00	17:23
Qualification Junior Mixed Teams	16:47	17:38	17:22	18:52	17:40	19:03
Qualification Junior Women's Teams	18:22	20:41	18:57	21:56	19:15	22:07

Thursday, October 15th, 2026						
	Warm-up		Training hall		Competition hall	
	Start	End	Start	End	Start	End
Qualification Senior Mixed Teams	12:07	14:20	12:42	15:35	13:00	15:46
Qualification Senior Women's Teams	15:07	16:09	15:42	17:48	16:00	17:59
Qualification Senior Men's Teams	17:22	18:12	17:57	19:27	18:15	19:38

Friday, October 16th, 2026						
	Warm-up		Training hall		Competition hall	
	Start	End	Start	End	Start	End
Finals Junior Men's Teams	13:27	14:17	14:02	15:32	14:20	15:43
Award Ceremony Junior Men's Teams					15:48	16:03
Final Junior Mixed Teams	15:27	16:17	16:02	17:32	16:20	17:43
Award Ceremony Junior Mixed Teams					17:48	18:03
Final Junior Women's Teams	17:27	18:25	18:02	19:58	18:20	20:09
Award Ceremony Junior Women's Teams					20:14	20:29

Saturday, October 17th, 2026						
	Warm-up		Training hall		Competition hall	
	Start	End	Start	End	Start	End
Final Senior Mixed Teams	12:07	12:57	12:42	14:12	13:00	14:23
Award Ceremony Senior Mixed Teams					14:28	14:43
Final Senior Women's Teams	14:07	14:57	14:42	16:12	15:00	16:23
Award Ceremony Senior Women's Teams					16:28	16:43
Final Senior Men's Teams	16:07	16:57	16:42	18:12	17:00	18:23
Award Ceremony Senior Men's Teams					18:28	18:43
SmartScoring Shooting Star Award					18:44	18:49
Team of the Year 2024 Award					18:50	18:55
All Stars Announcement					18:56	19:11
Fair Play Athlete Award Ech 2026					19:12	19:15
Closing the event					19:16	19:17
Banquet						20:30

TEAMGYM 2026
16TH EUROPEAN CHAMPIONSHIPS ESPOO, FINLAND

European Gymnastics

Junior Men Qualification

Wednesday,
October 14th 2026

General warm-up start	**15:07**
Apparatus warm-up start	**15:42**
Competition start	**16:00**
Competition end	**17:23**

			General warm-up		Apparatus warm-up						Competition					
					Floor		Tumble		Trampet		Floor		Tumble		Trampet	
#	Team	Rnd	Start	End	Start	End	Start	End	Start	End	Start	End	Start	End	Start	End
1	SWE	1	15:07	15:37	15:42	15:52					16:00	16:03				
2	GBR	1	15:11	15:41			15:46	15:56					16:04	16:07		
3	NOR	1	15:15	15:45					15:50	16:00					16:08	16:11
4	AZE	1	15:19	15:49	15:54	16:04					16:12	16:15				
5	ISL	1	15:23	15:53			15:58	16:08					16:16	16:19		
6	DEN	1	15:27	15:57					16:02	16:12					16:20	16:23
7	SWE	2					16:12	16:22					16:30	16:33		
8	GBR	2							16:16	16:26					16:34	16:37
9	NOR	2			16:20	16:30					16:38	16:41				
10	AZE	2					16:24	16:34					16:42	16:45		
11	ISL	2							16:28	16:38					16:46	16:49
12	DEN	2			16:32	16:42					16:50	16:53				
13	SWE	3							16:42	16:52					17:00	17:03
14	GBR	3			16:46	16:56					17:04	17:07				
15	NOR	3					16:50	17:00					17:08	17:11		
16	AZE	3							16:54	17:04					17:12	17:15
17	ISL	3			16:58	17:08					17:16	17:19				
18	DEN	3					17:02	17:12					17:20	17:23		

TEAMGYM 2026
16TH EUROPEAN CHAMPIONSHIPS ESPOO, FINLAND

European Gymnastics

Junior Mixed Qualification

Wednesday,
October 14th 2026

General warm-up start	**16:47**
Apparatus warm-up start	**17:22**
Competition start	**17:40**
Competition end	**19:03**

			General warm-up		Apparatus warm-up						Competition					
					Floor		Tumble		Trampet		Floor		Tumble		Trampet	
#	Team	Rnd	Start	End	Start	End	Start	End	Start	End	Start	End	Start	End	Start	End
1	CZE	1	16:47	17:17	17:22	17:32					17:40	17:43				
2	DEN	1	16:51	17:21			17:26	17:36					17:44	17:47		
3	ISL	1	16:55	17:25					17:30	17:40					17:48	17:51
4	GBR	1	16:59	17:29	17:34	17:44					17:52	17:55				
5	NOR	1	17:03	17:33			17:38	17:48					17:56	17:59		
6	SWE	1	17:07	17:37					17:42	17:52					18:00	18:03
7	CZE	2					17:52	18:02					18:10	18:13		
8	DEN	2							17:56	18:06					18:14	18:17
9	ISL	2			18:00	18:10					18:18	18:21				
10	GBR	2					18:04	18:14					18:22	18:25		
11	NOR	2							18:08	18:18					18:26	18:29
12	SWE	2			18:12	18:22					18:30	18:33				
13	CZE	3							18:22	18:32					18:40	18:43
14	DEN	3			18:26	18:36					18:44	18:47				
15	ISL	3					18:30	18:40					18:48	18:51		
16	GBR	3							18:34	18:44					18:52	18:55
17	NOR	3			18:38	18:48					18:56	18:59				
18	SWE	3					18:42	18:52					19:00	19:03		

TEAMGYM 2026
16TH EUROPEAN CHAMPIONSHIPS ESPOO, FINLAND

European Gymnastics

Junior Women Qualification Sub 1

Wednesday,
October 14th 2026

General warm-up start	**18:22**
Apparatus warm-up start	**18:57**
Competition start	**19:15**
Competition end	**20:38**

			General warm-up		Apparatus warm-up						Competition					
					Floor		Tumble		Trampet		Floor		Tumble		Trampet	
#	Team	Rnd	Start	End	Start	End	Start	End	Start	End	Start	End	Start	End	Start	End
1	GBR	1	18:22	18:52	18:57	19:07					19:15	19:18				
2	POR	1	18:26	18:56			19:01	19:11					19:19	19:22		
3	AUT	1	18:30	19:00					19:05	19:15					19:23	19:26
4	FIN	1	18:34	19:04	19:09	19:19					19:27	19:30				
5	GER	1	18:38	19:08			19:13	19:23					19:31	19:34		
6	ISL	1	18:42	19:12					19:17	19:27					19:35	19:38
7	GBR	2					19:27	19:37					19:45	19:48		
8	POR	2							19:31	19:41					19:49	19:52
9	AUT	2			19:35	19:45					19:53	19:56				
10	FIN	2					19:39	19:49					19:57	20:00		
11	GER	2							19:43	19:53					20:01	20:04
12	ISL	2			19:47	19:57					20:05	20:08				
13	GBR	3							19:57	20:07					20:15	20:18
14	POR	3			20:01	20:11					20:19	20:22				
15	AUT	3					20:05	20:15					20:23	20:26		
16	FIN	3							20:09	20:19					20:27	20:30
17	GER	3			20:13	20:23					20:31	20:34				
18	ISL	3					20:17	20:27					20:35	20:38		

TEAMGYM 2026
16TH EUROPEAN CHAMPIONSHIPS ESPOO, FINLAND

European Gymnastics

Junior Women Qualification Sub 2

Wednesday,
October 14th 2026

General warm-up start	**19:51**
Apparatus warm-up start	**20:26**
Competition start	**20:44**
Competition end	**22:07**

			General warm-up		Apparatus warm-up						Competition					
					Floor		Tumble		Trampet		Floor		Tumble		Trampet	
#	Team	Rnd	Start	End	Start	End	Start	End	Start	End	Start	End	Start	End	Start	End
1	LUX	1	19:51	20:21	20:26	20:36					20:44	20:47				
2	SWE	1	19:55	20:25			20:30	20:40					20:48	20:51		
3	NOR	1	19:59	20:29					20:34	20:44					20:52	20:55
4	CZE	1	20:03	20:33	20:38	20:48					20:56	20:59				
5	ITA	1	20:07	20:37			20:42	20:52					21:00	21:03		
6	FRA	1	20:11	20:41					20:46	20:56					21:04	21:07
7	LUX	2					20:56	21:06					21:14	21:17		
8	SWE	2							21:00	21:10					21:18	21:21
9	NOR	2			21:04	21:14					21:22	21:25				
10	CZE	2					21:08	21:18					21:26	21:29		
11	ITA	2							21:12	21:22					21:30	21:33
12	FRA	2			21:16	21:26					21:34	21:37				
13	LUX	3							21:26	21:36					21:44	21:47
14	SWE	3			21:30	21:40					21:48	21:51				
15	NOR	3					21:34	21:44					21:52	21:55		
16	CZE	3							21:38	21:48					21:56	21:59
17	ITA	3			21:42	21:52					22:00	22:03				
18	FRA	3					21:46	21:56					22:04	22:07		

TEAMGYM 2026
16TH EUROPEAN CHAMPIONSHIPS
ESPOO, FINLAND

European Gymnastics

Senior Mixed Qualification Subdivision 1

Thursday
October 15th 2026

General warm-up start	**12:07**
Apparatus warm-up start	**12:42**
Competition start	**13:00**
Competition end	**14:19**

			General warm-up		Apparatus warm-up						Competition					
					Floor		Tumble		Trampet		Floor		Tumble		Trampet	
#	Team	Rnd	Start	End	Start	End	Start	End	Start	End	Start	End	Start	End	Start	End
1	NED	1	12:07	12:37	12:42	12:52					13:00	13:03				
2	ISL	1	12:11	12:41			12:46	12:56					13:04	13:07		
3	GBR	1	12:15	12:45					12:50	13:00					13:08	13:11
4	ITA	1	12:19	12:49	12:54	13:04					13:12	13:15				
5	SWE	1	12:23	12:53			12:58	13:08					13:16	13:19		
6	NED	2					13:12	13:22					13:30	13:33		
7	ISL	2							13:16	13:26					13:34	13:37
8	GBR	2			13:20	13:30					13:38	13:41				
9	ITA	2					13:24	13:34					13:42	13:45		
10	SWE	2							13:28	13:38					13:46	13:49
11	NED	3							13:42	13:52					14:00	14:03
12	ISL	3			13:46	13:56					14:04	14:07				
13	GBR	3					13:50	14:00					14:08	14:11		
14	ITA	3							13:54	14:04					14:12	14:15
15	SWE	3			13:58	14:08					14:16	14:19				

TEAMGYM 2026
16TH EUROPEAN CHAMPIONSHIPS ESPOO, FINLAND

European Gymnastics

Senior Mixed Qualification Subdivison 2

Thursday
October 15th 2026

General warm-up start	**13:30**
Apparatus warm-up start	**14:05**
Competition start	**14:23**
Competition end	**15:46**

			General warm-up		Apparatus warm-up						Competition					
					Floor		Tumble		Trampet		Floor		Tumble		Trampet	
#	Team	Rnd	Start	End	Start	End	Start	End	Start	End	Start	End	Start	End	Start	End
1	CZE	1	13:30	14:00					14:05	14:15					14:23	14:26
2	FIN	1	13:34	14:04	14:09	14:19					14:27	14:30				
3	GER	1	13:39	14:09			14:13	14:23					14:31	14:34		
4	DEN	1	13:43	14:13					14:17	14:27					14:35	14:38
5	NOR	1	13:47	14:17	14:21	14:31					14:39	14:42				
6	FRA	1	13:50	14:20			14:25	14:35					14:43	14:46		
7	CZE	2			14:35	14:45					14:53	14:56				
8	FIN	2					14:39	14:49					14:57	15:00		
9	GER	2							14:43	14:53					15:01	15:04
10	DEN	2			14:47	14:57					15:05	15:08				
11	NOR	2					14:51	15:01					15:09	15:12		
12	FRA	2							14:55	15:05					15:13	15:16
13	CZE	3					15:05	15:15					15:23	15:26		
14	FIN	3							15:09	15:19					15:27	15:30
15	GER	3			15:13	15:23					15:31	15:34				
16	DEN	3					15:17	15:27					15:35	15:38		
17	NOR	3							15:21	15:31					15:39	15:42
18	FRA	3			15:25	15:35					15:43	15:46				

Senior Women's Qualification

Thursday
October 15th 2026

General warm-up start	**15:07**
Apparatus warm-up start	**15:42**
Competition start	**16:00**
Competition end	**17:59**

			General warm-up		Apparatus warm-up						Competition					
					Floor		Tumble		Trampet		Floor		Tumble		Trampet	
#	Team	Rnd	Start	End	Start	End	Start	End	Start	End	Start	End	Start	End	Start	End
1	AUT	1	15:07	15:37	15:42	15:52					16:00	16:03				
2	GBR	1	15:11	15:41			15:46	15:56					16:04	16:07		
3	LUX	1	15:15	15:45					15:50	16:00					16:08	16:11
4	DEN	1	15:19	15:49	15:54	16:04					16:12	16:15				
5	SWE	1	15:23	15:53			15:58	16:08					16:16	16:19		
6	FIN	1	15:27	15:57					16:02	16:12					16:20	16:23
7	NOR	1	15:31	16:01	16:06	16:16					16:24	16:27				
8	ISL	1	15:35	16:05			16:10	16:20					16:28	16:31		
9	POR	1	15:39	16:09					16:14	16:24					16:32	16:35
10	AUT	2					16:24	16:34					16:42	16:45		
11	GBR	2							16:28	16:38					16:46	16:49
12	LUX	2			16:32	16:42					16:50	16:53				
13	DEN	2					16:36	16:46					16:54	16:57		
14	SWE	2							16:40	16:50					16:58	17:01
15	FIN	2			16:44	16:54					17:02	17:05				
16	NOR	2					16:48	16:58					17:06	17:09		
17	ISL	2							16:52	17:02					17:10	17:13
18	POR	2			16:56	17:06					17:14	17:17				
19	AUT	3							17:06	17:16					17:24	17:27
20	GBR	3			17:10	17:20					17:28	17:31				
21	LUX	3					17:14	17:24					17:32	17:35		
22	DEN	3							17:18	17:28					17:36	17:39
23	SWE	3			17:22	17:32					17:40	17:43				
24	FIN	3					17:26	17:36					17:44	17:47		
25	NOR	3							17:30	17:40					17:48	17:51
26	ISL	3			17:34	17:44					17:52	17:55				
27	POR	3					17:38	17:48					17:56	17:59		

Senior Men's Qualification

Thursday
October 15th 2026

General warm-up start	**17:22**
Apparatus warm-up start	**17:57**
Competition start	**18:15**
Competition end	**19:38**

			General warm-up		Apparatus warm-up						Competition					
					Floor		Tumble		Trampet		Floor		Tumble		Trampet	
#	Team	Rnd	Start	End	Start	End	Start	End	Start	End	Start	End	Start	End	Start	End
1	GBR	1	17:22	17:52	17:57	18:07					18:15	18:18				
2	EST	1	17:26	17:56			18:01	18:11					18:19	18:22		
3	SWE	1	17:30	18:00					18:05	18:15					18:23	18:26
4	NOR	1	17:34	18:04	18:09	18:19					18:27	18:30				
5	POR	1	17:38	18:08			18:13	18:23					18:31	18:34		
6	DEN	1	17:42	18:12					18:17	18:27					18:35	18:38
7	GBR	2					18:27	18:37					18:45	18:48		
8	EST	2							18:31	18:41					18:49	18:52
9	SWE	2			18:35	18:45					18:53	18:56				
10	NOR	2					18:39	18:49					18:57	19:00		
11	POR	2							18:43	18:53					19:01	19:04
12	DEN	2			18:47	18:57					19:05	19:08				
13	GBR	3							18:57	19:07					19:15	19:18
14	EST	3			19:01	19:11					19:19	19:22				
15	SWE	3					19:05	19:15					19:23	19:26		
16	NOR	3							19:09	19:19					19:27	19:30
17	POR	3			19:13	19:23					19:31	19:34				
18	DEN	3					19:17	19:27					19:35	19:38		

TEAMGYM 2026
16TH EUROPEAN CHAMPIONSHIPS ESPOO, FINLAND

European Gymnastics

Junior Men's Final

Friday
October 16th 2026

General warm-up start	**13:27**
Apparatus warm-up start	**14:02**
Competition start	**14:20**
Competition end	**15:43**

			General warm-up		Apparatus warm-up						Competition					
					Floor		Tumble		Trampet		Floor		Tumble		Trampet	
#	Team	Rnd	Start	End	Start	End	Start	End	Start	End	Start	End	Start	End	Start	End
1	Q4-6	1	13:27	13:57	14:02	14:12					14:20	14:23				
2	Q4-6	1	13:31	14:01			14:06	14:16					14:24	14:27		
3	Q4-6	1	13:35	14:05					14:10	14:20					14:28	14:31
4	Q1-3	1	13:39	14:09	14:14	14:24					14:32	14:35				
5	Q1-3	1	13:43	14:13			14:18	14:28					14:36	14:39		
6	Q1-3	1	13:47	14:17					14:22	14:32					14:40	14:43
7	Q4-6	2					14:32	14:42					14:50	14:53		
8	Q4-6	2							14:36	14:46					14:54	14:57
9	Q4-6	2			14:40	14:50					14:58	15:01				
10	Q1-3	2					14:44	14:54					15:02	15:05		
11	Q1-3	2							14:48	14:58					15:06	15:09
12	Q1-3	2			14:52	15:02					15:10	15:13				
13	Q4-6	3							15:02	15:12					15:20	15:23
14	Q4-6	3			15:06	15:16					15:24	15:27				
15	Q4-6	3					15:10	15:20					15:28	15:31		
16	Q1-3	3							15:14	15:24					15:32	15:35
17	Q1-3	3			15:18	15:28					15:36	15:39				
18	Q1-3	3					15:22	15:32					15:40	15:43		

TEAMGYM 2026
16TH EUROPEAN CHAMPIONSHIPS ESPOO, FINLAND

European Gymnastics

Junior Mixed Final

Friday
October 16th 2026

General warm-up start	**15:27**
Apparatus warm-up start	**16:02**
Competition start	**16:20**
Competition end	**17:43**

			General warm-up		Apparatus warm-up						Competition					
					Floor		Tumble		Trampet		Floor		Tumble		Trampet	
#	Team	Rnd	Start	End	Start	End	Start	End	Start	End	Start	End	Start	End	Start	End
1	**Q4-6**	**1**	15:27	15:57	16:02	16:12					16:20	16:23				
2	**Q4-6**	**1**	15:31	16:01			16:06	16:16					16:24	16:27		
3	**Q4-6**	**1**	15:35	16:05					16:10	16:20					16:28	16:31
4	**Q1-3**	**1**	15:39	16:09	16:14	16:24					16:32	16:35				
5	**Q1-3**	**1**	15:43	16:13			16:18	16:28					16:36	16:39		
6	**Q1-3**	**1**	15:47	16:17					16:22	16:32					16:40	16:43
7	**Q4-6**	**2**					16:32	16:42					16:50	16:53		
8	**Q4-6**	**2**							16:36	16:46					16:54	16:57
9	**Q4-6**	**2**			16:40	16:50					16:58	17:01				
10	**Q1-3**	**2**					16:44	16:54					17:02	17:05		
11	**Q1-3**	**2**							16:48	16:58					17:06	17:09
12	**Q1-3**	**2**			16:52	17:02					17:10	17:13				
13	**Q4-6**	**3**							17:02	17:12					17:20	17:23
14	**Q4-6**	**3**			17:06	17:16					17:24	17:27				
15	**Q4-6**	**3**					17:10	17:20					17:28	17:31		
16	**Q1-3**	**3**							17:14	17:24					17:32	17:35
17	**Q1-3**	**3**			17:18	17:28					17:36	17:39				
18	**Q1-3**	**3**					17:22	17:32					17:40	17:43		

Junior Women's Final

Friday
October 16th 2026

General warm-up start	**17:27**
Apparatus warm-up start	**18:02**
Competition start	**18:20**
Competition end	**20:09**

			General warm-up		Apparatus warm-up						Competition					
					Floor		Tumble		Trampet		Floor		Tumble		Trampet	
#	Team	Rnd	Start	End	Start	End	Start	End	Start	End	Start	End	Start	End	Start	End
1	**Q5-8**	**1**	17:27	17:57	18:02	18:12					18:20	18:23				
2	**Q5-8**	**1**	17:31	18:01			18:06	18:16					18:24	18:27		
3	**Q5-8**	**1**	17:35	18:05					18:10	18:20					18:28	18:31
4	**Q5-8**	**1**	17:39	18:09	18:14	18:24					18:32	18:35				
5	**Q1-4**	**1**	17:43	18:13			18:18	18:28					18:36	18:39		
6	**Q1-4**	**1**	17:47	18:17					18:22	18:32					18:40	18:43
7	**Q1-4**	**1**	17:51	18:21	18:26	18:36					18:44	18:47				
8	**Q1-4**	**1**	17:55	18:25			18:30	18:40					18:48	18:51		
9	**Q5-8**	**2**					18:41	18:51					18:59	19:02		
10	**Q5-8**	**2**							18:45	18:55					19:03	19:06
11	**Q5-8**	**2**			18:49	18:59					19:07	19:10				
12	**Q5-8**	**2**					18:53	19:03					19:11	19:14		
13	**Q1-4**	**2**							18:57	19:07					19:15	19:18
14	**Q1-4**	**2**			19:01	19:11					19:19	19:22				
15	**Q1-4**	**2**					19:05	19:15					19:23	19:26		
16	**Q1-4**	**2**							19:09	19:19					19:27	19:30
17	**Q5-8**	**3**							19:20	19:30					19:38	19:41
18	**Q5-8**	**3**			19:24	19:34					19:42	19:45				
19	**Q5-8**	**3**					19:28	19:38					19:46	19:49		
20	**Q5-8**	**3**							19:32	19:42					19:50	19:53
21	**Q1-4**	**3**			19:36	19:46					19:54	19:57				
22	**Q1-4**	**3**					19:40	19:50					19:58	20:01		
23	**Q1-4**	**3**							19:44	19:54					20:02	20:05
24	**Q1-4**	**3**			19:48	19:58					20:06	20:09				

TEAMGYM 2026
16TH EUROPEAN CHAMPIONSHIPS ESPOO, FINLAND

European Gymnastics

Senior Mixed Final

Saturday
October 17th 2026

General warm-up start	**12:07**
Apparatus warm-up start	**12:42**
Competition start	**13:00**
Competition end	**14:23**

			General warm-up		Apparatus warm-up						Competition					
					Floor		Tumble		Trampet		Floor		Tumble		Trampet	
#	Team	Rnd	Start	End	Start	End	Start	End	Start	End	Start	End	Start	End	Start	End
1	Q4-6	1	12:07	12:37	12:42	12:52					13:00	13:03				
2	Q4-6	1	12:11	12:41			12:46	12:56					13:04	13:07		
3	Q4-6	1	12:15	12:45					12:50	13:00					13:08	13:11
4	Q1-3	1	12:19	12:49	12:54	13:04					13:12	13:15				
5	Q1-3	1	12:23	12:53			12:58	13:08					13:16	13:19		
6	Q1-3	1	12:27	12:57					13:02	13:12					13:20	13:23
7	Q4-6	2					13:12	13:22					13:30	13:33		
8	Q4-6	2							13:16	13:26					13:34	13:37
9	Q4-6	2			13:20	13:30					13:38	13:41				
10	Q1-3	2					13:24	13:34					13:42	13:45		
11	Q1-3	2							13:28	13:38					13:46	13:49
12	Q1-3	2			13:32	13:42					13:50	13:53				
13	Q4-6	3							13:42	13:52					14:00	14:03
14	Q4-6	3			13:46	13:56					14:04	14:07				
15	Q4-6	3					13:50	14:00					14:08	14:11		
16	Q1-3	3							13:54	14:04					14:12	14:15
17	Q1-3	3			13:58	14:08					14:16	14:19				
18	Q1-3	3					14:02	14:12					14:20	14:23		

TEAMGYM 2026
16TH EUROPEAN CHAMPIONSHIPS ESPOO, FINLAND

European Gymnastics

Senior Women's Final

Saturday
October 17th 2026

General warm-up start	**14:07**
Apparatus warm-up start	**14:42**
Competition start	**15:00**
Competition end	**16:23**

			General warm-up		Apparatus warm-up						Competition					
					Floor		Tumble		Trampet		Floor		Tumble		Trampet	
#	Team	Rnd	Start	End	Start	End	Start	End	Start	End	Start	End	Start	End	Start	End
1	Q4-6	1	14:07	14:37	14:42	14:52					15:00	15:03				
2	Q4-6	1	14:11	14:41			14:46	14:56					15:04	15:07		
3	Q4-6	1	14:15	14:45					14:50	15:00					15:08	15:11
4	Q1-3	1	14:19	14:49	14:54	15:04					15:12	15:15				
5	Q1-3	1	14:23	14:53			14:58	15:08					15:16	15:19		
6	Q1-3	1	14:27	14:57					15:02	15:12					15:20	15:23
7	Q4-6	2					15:12	15:22					15:30	15:33		
8	Q4-6	2							15:16	15:26					15:34	15:37
9	Q4-6	2			15:20	15:30					15:38	15:41				
10	Q1-3	2					15:24	15:34					15:42	15:45		
11	Q1-3	2							15:28	15:38					15:46	15:49
12	Q1-3	2			15:32	15:42					15:50	15:53				
13	Q4-6	3							15:42	15:52					16:00	16:03
14	Q4-6	3			15:46	15:56					16:04	16:07				
15	Q4-6	3					15:50	16:00					16:08	16:11		
16	Q1-3	3							15:54	16:04					16:12	16:15
17	Q1-3	3			15:58	16:08					16:16	16:19				
18	Q1-3	3					16:02	16:12					16:20	16:23		

TEAMGYM 2026
16TH EUROPEAN CHAMPIONSHIPS ESPOO, FINLAND

European Gymnastics

Senior Men's Final

Saturday
October 17th 2026

General warm-up start	**16:07**
Apparatus warm-up start	**16:42**
Competition start	**17:00**
Competition end	**18:23**

			General warm-up		Apparatus warm-up						Competition					
					Floor		Tumble		Trampet		Floor		Tumble		Trampet	
#	Team	Rnd	Start	End	Start	End	Start	End	Start	End	Start	End	Start	End	Start	End
1	Q4-6	1	16:07	16:37	16:42	16:52					17:00	17:03				
2	Q4-6	1	16:11	16:41			16:46	16:56					17:04	17:07		
3	Q4-6	1	16:15	16:45					16:50	17:00					17:08	17:11
4	Q1-3	1	16:19	16:49	16:54	17:04					17:12	17:15				
5	Q1-3	1	16:23	16:53			16:58	17:08					17:16	17:19		
6	Q1-3	1	16:27	16:57					17:02	17:12					17:20	17:23
7	Q4-6	2					17:12	17:22					17:30	17:33		
8	Q4-6	2							17:16	17:26					17:34	17:37
9	Q4-6	2			17:20	17:30					17:38	17:41				
10	Q1-3	2					17:24	17:34					17:42	17:45		
11	Q1-3	2							17:28	17:38					17:46	17:49
12	Q1-3	2			17:32	17:42					17:50	17:53				
13	Q4-6	3							17:42	17:52					18:00	18:03
14	Q4-6	3			17:46	17:56					18:04	18:07				
15	Q4-6	3					17:50	18:00					18:08	18:11		
16	Q1-3	3							17:54	18:04					18:12	18:15
17	Q1-3	3			17:58	18:08					18:16	18:19				
18	Q1-3	3					18:02	18:12					18:20	18:23		

TEAMGYM 2026
16TH EUROPEAN CHAMPIONSHIPS ESPOO, FINLAND

EUROPEAN CHAMPIONSHIPS

16th European TeamGym Championships
Juniors & Seniors, Espoo (FIN)
October 14th to 17th, 2026

Updated 08.10.2026

NAME DECLARATION CHANGE
Appendix 6

Each Team submits this form at the Accreditation indicating those gymnasts who are planned to be competing and those that are reserves (column ''Accreditation"). Teams **may** resubmit this form with revisions, to the LOC office, for the "Qualifications" or the "Finals", at least **ten minutes** before the scheduled start of the team's first discipline in the competition. Copies will be kept at the LOC.

Gymnast competing ✓ or Reserve gymnast R

National Federation		Name of coach	
Category	☐ Juniors	☐ Seniors	
Section	☐ Women	☐ Mixed	☐ Men

Gymnast number	Full name	Date of birth	Accred.	Qual.	Final

Accreditation Signature: _____ Date/time: _____ LOC signature _____

Qualification Signature: _____ Date/time: _____ LOC signature _____

Final Signature: _____ Date/time: _____ LOC signature _____

EBU
OPERATING EUROVISION AND EURORADIO

SMARTSCORING

TEAMGYM 2026
16TH EUROPEAN CHAMPIONSHIPS ESPOO, FINLAND

EUROPEAN CHAMPIONSHIPS

16th European TeamGym Championships
Juniors & Seniors, Espoo (FIN)
October 14th to 17th, 2026

Updated 10.10.2026

Request to replace an injured or ill gymnast

Appendix 7 – Espoo revision · also amends Appendix 6

If a gymnast is injured during the competition **prior to the Floor**, the following disposition will be applied: After the team declaration, reserves may only be used in case of injury or illness that is confirmed by the Official European Gymnastics Doctor. The affected gymnast can then be taken out and replaced with an accredited reserve. Gymnasts that are replaced may not participate further in the Championships.

PART A · TEAM

Coach or team manager

NATIONAL FEDERATION	CATEGORY ☐ Junior ☐ Senior	SECTION ☐ Women ☐ Mixed ☐ Men	COMPETITION ☐ Qual. ☐ Final

GYMNAST TAKEN OUT · NO.	GYMNAST TAKEN OUT · FULL NAME	GYMNAST IN · NO.	ACCREDITED RESERVE IN · FULL NAME

TIME OF INJURY / ILLNESS	WHERE ☐ Training hall – general warm-up ☐ Training hall – apparatus warm-up ☐ Competition hall ☐ Other	TEAM HAS PERFORMED FLOOR? ☐ No (required for replacement)

FLOOR SCHEDULED START	COACH NAME	COACH SIGNATURE · TIME

PART B · MEDICAL CONFIRMATION

LOC doctor, representative of the European Gymnastics Official Doctor

DECISION ☐ Injury confirmed ☐ Illness confirmed ☐ Not confirmed *Do not write a diagnosis here. Record details on the Injury/Illness Report Form (Medical Guidelines Annex 2).*	EXAMINED IN ☐ Honkahalli ☐ Metro Areena

DOCTOR NAME	SIGNATURE	TIME

European Gymnastics OFFICIAL DOCTOR INFORMED (RADIO/PHONE) AT

PART C · RECORDS

May be completed after the team's competition

European Gymnastics OFFICIAL DOCTOR · SIGNATURE	TIME	INJURY/ILLNESS REPORT STARTED ☐ Yes

LOC OFFICE · APPENDIX 6 AMENDED · INFORMED ☐ Floor Manager ☐ Superior Jury	LOC SIGNATURE · TIME

COACH · ACKNOWLEDGES THE AMENDED NAME DECLARATION · SIGNATURE · TIME

TR – Specific Rules TeamGym, Art. 2: after the team declaration, reserves may be used only for an injury or illness confirmed by the official doctor. Only an accredited reserve may come in, and only before the team's floor routine. After floor, the team continues without the gymnast, and a reserve who has not performed floor may not compete. A replaced gymnast may not take part further in the Championships.

EBU
OPERATING EUROVISION AND EURORADIO

SMARTSCORING

TEAMGYM 2026
16TH EUROPEAN CHAMPIONSHIPS ESPOO, FINLAND

EUROPEAN CHAMPIONSHIPS

2026 TEAMGYM EUROPEAN CHAMPIONSHIPS
ESPOO (FIN), OCTOBER 14TH – 17TH, 2026

MUSIC RELEASE FORM
Appendix 8

This form must be handed in to the LOC at accreditation

National Federation			
Section	Name of music	Composer	Duration of music
Junior Women's Floor			
Junior Women's Tumble			
Junior Women's Trampet			
Junior Mixed Floor			
Junior Mixed Tumble			
Junior Mixed Trampet			
Junior Men's Floor			
Junior Men's Tumble			
Junior Men's Trampet			

With the below signature, I confirm that my Federation has obtained the necessary rights to use the above-listed music during this event.

Name of HoD:_____ **Place / Date:**_____

Signature:_____

TEAMGYM 2026
16TH EUROPEAN CHAMPIONSHIPS ESPOO, FINLAND

EUROPEAN CHAMPIONSHIPS

2026 TEAMGYM EUROPEAN CHAMPIONSHIPS
ESPOO (FIN), OCTOBER 14TH – 17TH, 2026

MUSIC RELEASE FORM
Appendix 8

This form must be handed in to the LOC at accreditation

National Federation			
Section	Name of music	Composer	Duration of music
Senior Women's Floor			
Senior Women's Tumble			
Senior Women's Trampet			
Senior Mixed Floor			
Senior Mixed Tumble			
Senior Mixed Trampet			
Senior Men's Floor			
Senior Men's Tumble			
Senior Men's Trampet			

With the below signature, I confirm that my Federation has obtained the necessary rights to use the above-listed music during this event.

Name of HoD:_____ **Place / Date:**_____

Signature:_____